T40S5-LM

PNEUMATIC STAPLER
AGRAFEUSE PNEUMATIQUE
ENGRAPADORA NEUMÁTICA

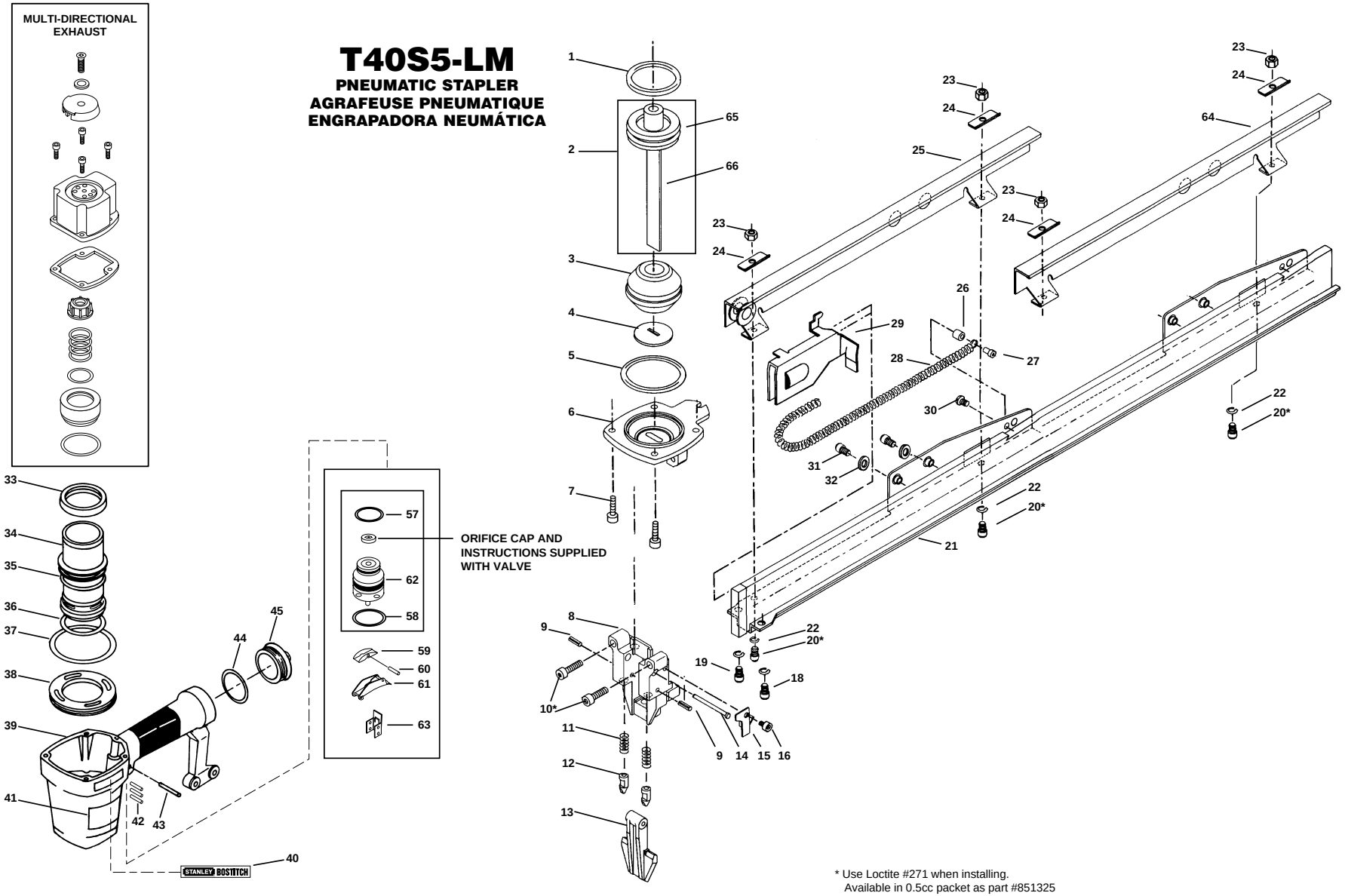

* Use Loctite #271 when installing.
Available in 0.5cc packet as part #851325

IP1041-1REVB 4/97

Spare Parts for T40S5-LM

Item#	Illus. #	Description
851547	1	O-RING,1.327X.138
T40082A	2	DRIVER/PISTON ASSY,S5
N50085	3	BUMPER
T40251	4	PLATE BUMPER
851483	5	O-RING,1.739X.070
T40196A	6	BOTTOM PLATE ASSY.
MSC5080-20	7	SCREW,SOC HD. CAP M5 X 20
T40151	8	NOSE, S5
9042	9	PIN,3/32x7/16
MSC5080-25	10	SCREW,SHCS,M5X0.80X25
100155	11	SPRING, DOOR LATCH
100154	12	LATCH, NOSE DOOR
T40217	13	DOOR
T40148	14	PIN, DOOR HINGE
MSC4070-5	16	SCREW,SHCS,M4X0.70X5
MSC5080-10	18	SCREW,SHCS,M5X0.80X10
MLW5	19	WASHER,HSLW M5
MSC4070-6	20	SCREW,SHCS,M4X0.70X6
MSC4070-10	20	SCREW,SHCS,M4X0.70X10
102451	21	ASSEMBLY,MAGAZINE S5-LM
LW8	22	WASHER,#8 LOCK
MHE4070-100	23	NUT, ESN M4 X 0.7
T40186	24	WASHER, CURVED
T40043A	25	SPRING COVER ASSY.
T40128	26	SPACER, SPRING ANCHOR
T40127	27	ANCHOR, FEED SPRING
102371	28	SPRING,FEED-LM
T40120	29	PUSHER, S5
MMP3050-12	30	SCREW,PANHDS,M3X0.50X12

MSC5080-12	31	SCREW,SHCS,M5X0.8X12	
T50118	32	WASHER,PWW M5	
N70151	33	CYLINDER SEAL	
T40198	34	CYLINDER SLEEVE	
N50034	35	CHECK SEAL	
850605	36	O-RING,1.925X.103	
850683	37	O-RING,2.425X.103	
N50015	38	RING, CYLINDER	
N50022	39	FRAME	
100644	39	HINGE PIN & TRIP STOP	
100813	40	LABEL,STANLEY BOSTITCH	
851817	41	LABEL,WARNING	
102549	42	PIN,SPECIAL SPIRAL	
MPP030020	43	PIN,SPIROL M3X20MM	
850235	44	O-RING,1.487X.103	
T40207	45	END CAP	
MSF6100-20	46	SCREW, SFHCS M6 X 1.00X20	
T50104	47	WASHER,SPECIAL	
T50006	49	COVER-EXHAUST	
T40255A	50	CAP,FRAME	
N50013	51	SEAL, CYLINDER CAP	
T50002	52	BUMPER, TOP	
854015	53	COMPRESSION SPRING	
MRG039231	54	O-RING,1.543X.125	
T50003	55	HEAD VALVE	
RG183109	56	O-RING,1.831X.098	
86459	57	O-RING,.614X.070	
MRG019824	58	O-RING,.780X.094	
T55092	59	ROCKER,TRIGGER	
MPD016012	60	PIN,DOWEL,.062X.459	
100607	61	ASSEMBLY,TRIGGER	

103547	62	KIT,SPEED TRIGGER VALVE	
N60048	63	GUIDE, TRIP (TRIGGER OP)	
102449	64	COVER,PUSHER SPRING S5-LM	
N50059	65	PISTON, MAIN	
T40252	66	DRIVER,S5 STAPLE	