# TU216-97

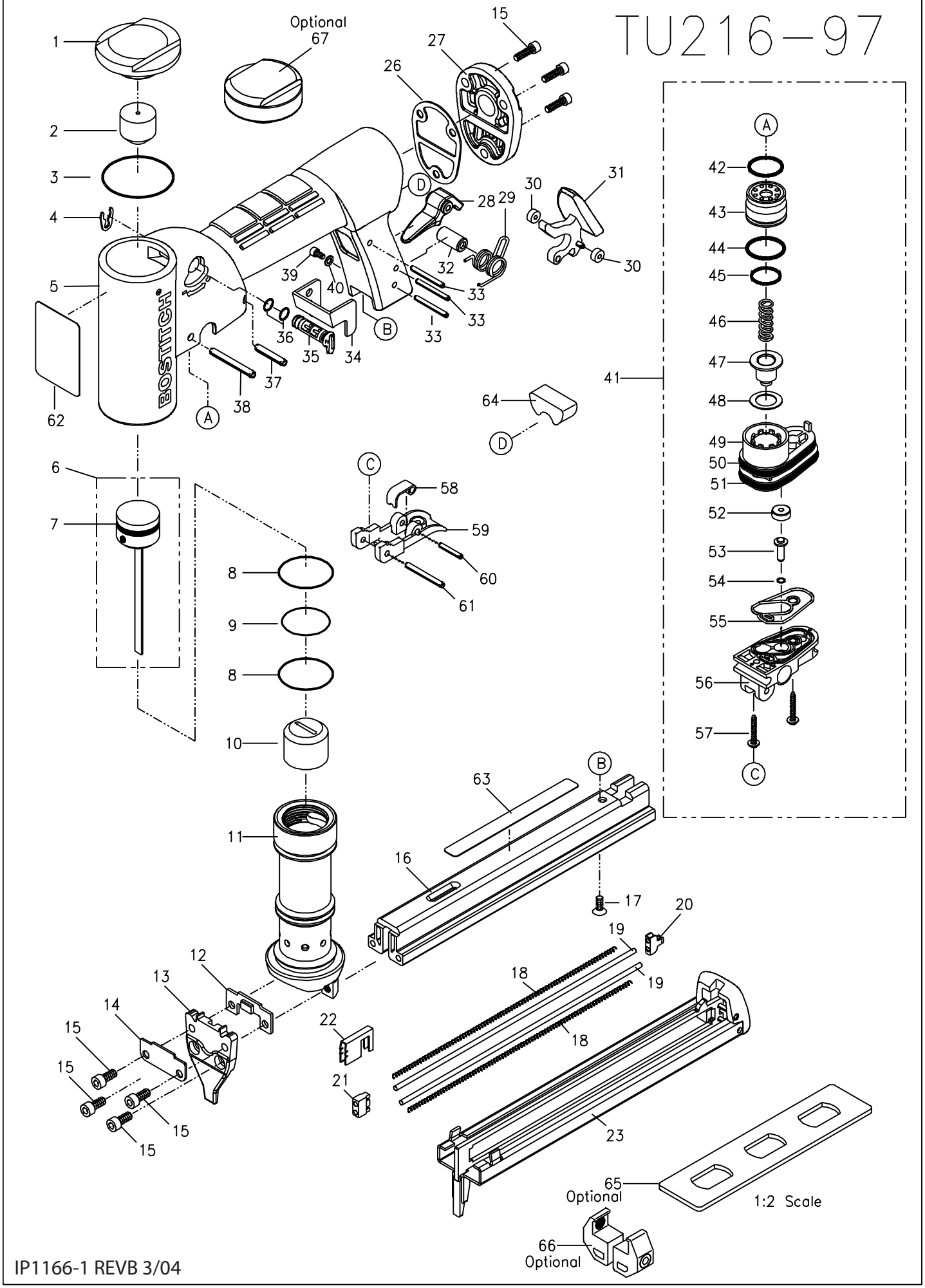


IP1166-1 REVB 3/04

| | | | | | |
|---|---|---|---|---|---|
| | TU216-97 | Parts List: | | IP1166-2REVB | |
| | (DC226002-1) | | | | |
| | To be Used with tool parts illustration: | | | IP1166-1REVB | |
| | and operation and maintenance manual: | | | 121265 | |
| | | Serial Number on the Tool: | | TU216-97 2235 | 000 and Higher |
| ITEM | PART # | DESCRIPTION | ITEM | PART # | DESCRIPTION |
| 01 | P2145203262 | Cap | 36 | S06S000600 | O-Ring |
| 02 | P2140001400 | Bumper , Piston Stop | 37 | S2904018000 | Spiral Pin |
| 03 | S06A002700 | O-Ring | 38 | S2904030000 | Spiral Pin |
| 04 | P2145201062 | Clip | 39 | S0110410100 | Hex. Soc. Hd. Bolt |
| 05 | G4208000 | Frame Unit | 40 | S0410400 | Spring Washer |
| 06 | G0310200 | Driver Unit | 41 | G1201300 | Trigger Unit |
| 07 | S06P001802 | O-Ring | 42 | S06A001600 | O-Ring |
| 08 | S06A012100 | O-Ring | 43 | P2142003100 | Head Valve |
| 09 | S06A002200 | O-Ring | 44 | S06Z003500 | O-Ring |
| 10 | P2140001200 | Bumper | 45 | S06Z003600 | O-Ring |
| 11 | P2140000163 | Sleeve, Cylinder | 46 | P2145201562 | Spring, Head Valve |
| 12 | P2276300865 | Plate, Driver Guide | 47 | P2140000300 | Seal, Exhaust |
| 13 | P2266300265 | Nose | 48 | P2140004200 | Seal Washer |
| 14 | P2145204362 | Plate, Nose | 49 | P2140004100 | Housing, Head Valve |
| 15 | S0110414100 | Hex. Soc. Hd. Bolt | 50 | S06A012400 | O-Ring |
| 16 | P2260000563 | Magazine | 51 | S06A012500 | O-Ring |
| 17 | S0310414100 | Flat Hd. Soc. Screw | 52 | P2140005400 | Seal, Trigger Stem |
| 18 | P2275201062 | Spring, Pusher | 53 | P2142003300 | Stem |
| 19 | P2275201162 | Guide,Spring | 54 | S06A000200 | O-Ring |
| 20 | P2275201362 | Seat,Spring Guide | 55 | P2140000766 | Seal, Valve |
| 21 | P2275201262 | Block,Pusher | 56 | P2140004066 | Housing , Trigger |
| 22 | P2266100657 | Pusher | 57 | S1310316100 | Button Cross Hd. Screw |
| 23 | G2605900 | Core Magazine Assb | 58 | P2145200462 | Plate, Trigger |
| 26 | P2140003400 | Gasket, End Cap | 59 | P2180000366 | Trigger |
| 27 | P2140001340 | Cap, End | 60 | S0803014000 | Spring Pin |
| 28 | P2140002066 | Latch, Inside | 61 | S0803020000 | Spring Pin |
| 29 | P2145203062 | Spring, Torsion | 62 | B214002001 | Warning Label (158577) |
| 30 | P2272001500 | Bushing | 63 | B226011001 | Product Label (158553) |
| 31 | P2140001966 | Latch Unit Assb | 64 | P2140005800 | Muffler |
| 32 | P2140004666 | Spring Busher | 65 | P2146305665 | Wrench (Optional) |
| 33 | S3203022000 | Spiral Pin | 66 | P2140005700 | Skirt Gauge Assb (Optional) |
| 34 | P2146304465 | Stop Plate | 67 | P2145205962 | Heavy Cap (Optional) |
| 35 | P2140000666 | Valve, Energy Control | | | |