HITACHI

LIST NO. F869

ELECTRIC TOOL PARTS LIST

■ CORDLESS DRIVER DRILL 2002・2・20

Model DS 14DVF (E1)

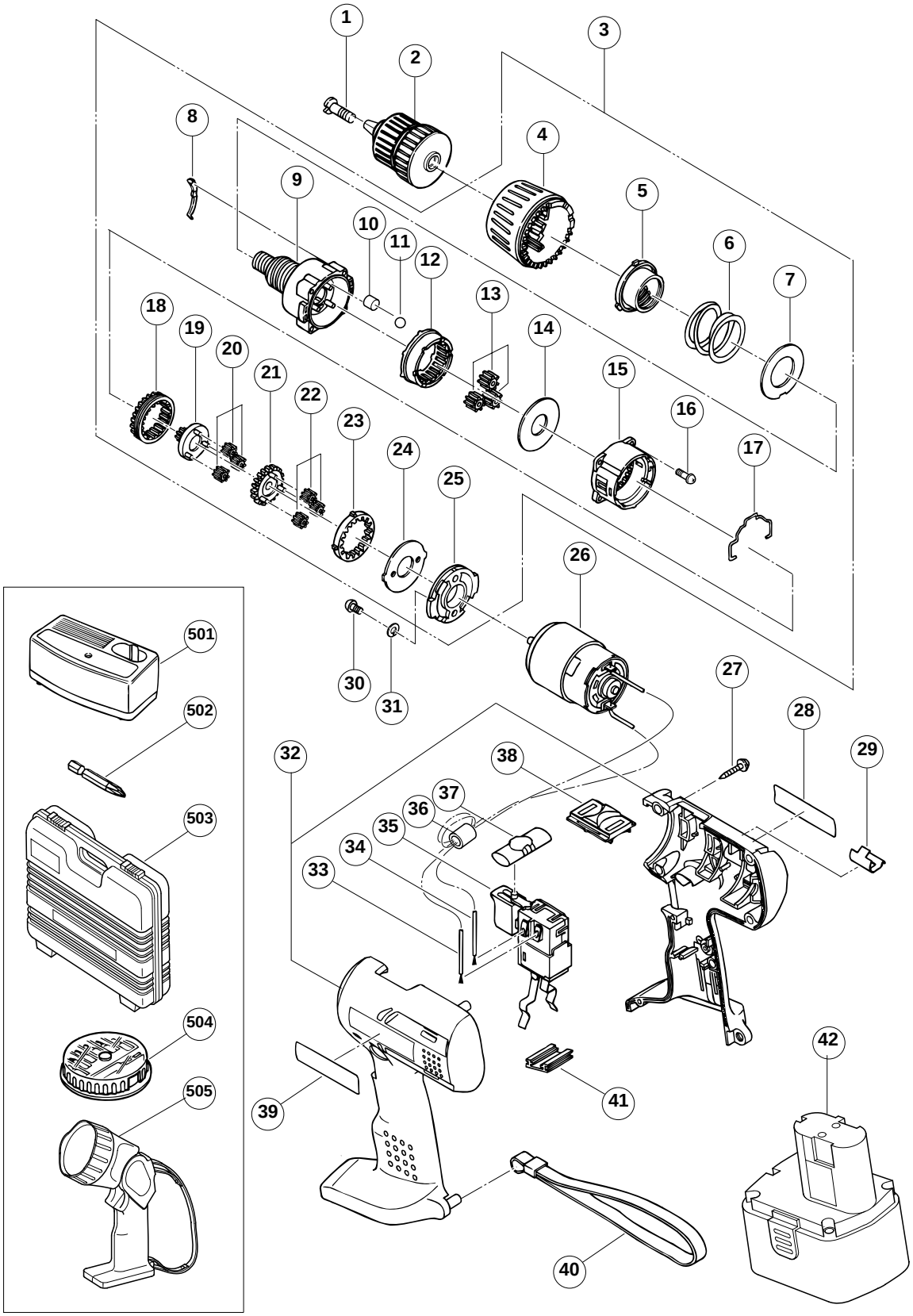

	ITEM NO.	CODE NO.	DESCRIPTION	NO. USED	REMARKS	
	1	318-228	SPECIAL SCREW (LEFT HAND) M5X35	1		
	2	312-516	DRILL CHUCK 10TLRD-N (W/O CHUCK WRENCH)	1		
	3	320-660	GEAR BOX ASS'Y	1	INCLUD.4-25	
	4	320-661	CAP	1		
	5	318-232	NUT	1		
	6	312-709	SPRING	1		
	7	312-714	WASHER (D)	1		
	8	312-713	CLICK SPRING	1		
	9	318-230	FRONT CASE	1		
	10	319-744	ROLLER	6		
	11	306-936	STEEL BALL D5	6		
	12	312-715	RING GEAR	1		
	13	312-705	PLANET GEAR (C) SET (3 PCS.)	3		
	14	312-704	WASHER (A)	1		
	15	312-697	REAR CASE	1		
	16	315-817	SCREW SET D3X12 (6 PCS.)	4		
	17	311-962	SHIFT ARM	1		
	18	315-137	SLIDE RING GEAR	1		
	19	315-805	PINION (C)	1		
	20	315-816	PLANET GEAR (B) SET (3 PCS.)	3		
	21	315-804	PINION (B)	1		
	22	315-815	PLANET GEAR (A) SET (3 PCS.)	3		
	23	315-136	FIRST RING GEAR	1		
	24	312-716	WASHER (B)	1		
	25	318-231	MOTOR SPACER	1		
	26	320-648	MOTOR	1		
	27	991-672	TAPPING SCREW (W/WASHER) D3X16	8		
*	28		NAME PLATE	1		
	29	318-237	BIT HOLDER	1		
	30	949-203	MACHINE SCREW M3X8 (10 PCS.)	2		
	31	949-451	SPRING WASHER M3 (10 PCS.)	2		
	32	320-647	HOUSING (A).(B) SET	1		
*	33	320-650	INTERNAL WIRE (BLACK)	1		
*	33	306-041	INTERNAL WIRE (B) (BLACK)	1	FOR NZL,AUS,USA,CAN	
*	34	320-649	INTERNAL WIRE (RED)	1		
*	34	306-040	INTERNAL WIRE (B) (RED)	1	FOR NZL,AUS,USA,CAN	
	35	320-145	DC-SPEED CONTROL SWITCH	1		
*	36	318-247	FERRITE CORE	1	FOR GBR,FRG,NOR,SWE,DEN	
	37	319-760	PUSHING BUTTON	1		
	38	318-234	SHIFT KNOB	1		
	39		HITACHI LABEL	1		
	40	306-952	STRAP (BLACK)	1		
	41	315-141	TERMINAL SUPPORT (A)	1		
*	42	319-933	BATTERY EB 1414 (W/ENGLISH N.P.)	1		
*	42	320-609	BATTERY EB 1414 (W/ENGLISH N.P)	1	FOR NZL	
*	42	320-610	BATTERY EB 1414 (W/ENGLISH N.P)	1	FOR USA,CAN	

* ALTERNATIVE PARTS

STANDARD ACCESSORIES

	ITEM NO.	CODE NO.	DESCRIPTION	NO. USED	REMARKS	
	501		CHARGER (MODEL UC 14SD)	1		
	502	318-236	+ DRIVER BIT NO.2 55L	1		
	503	320-653	CASE	1		
*	504		BIT SET	1	EXCEPT FOR NZL	
*	505		TORCHLIGHT (MODEL UB 18D)	1	EXCEPT FOR NZL,GBR	

* ALTERNATIVE PARTS

ITEM NO.	CODE NO.	DESCRIPTION	NO. USED	REMARKS	