Assembly Diagram for WH 12DH

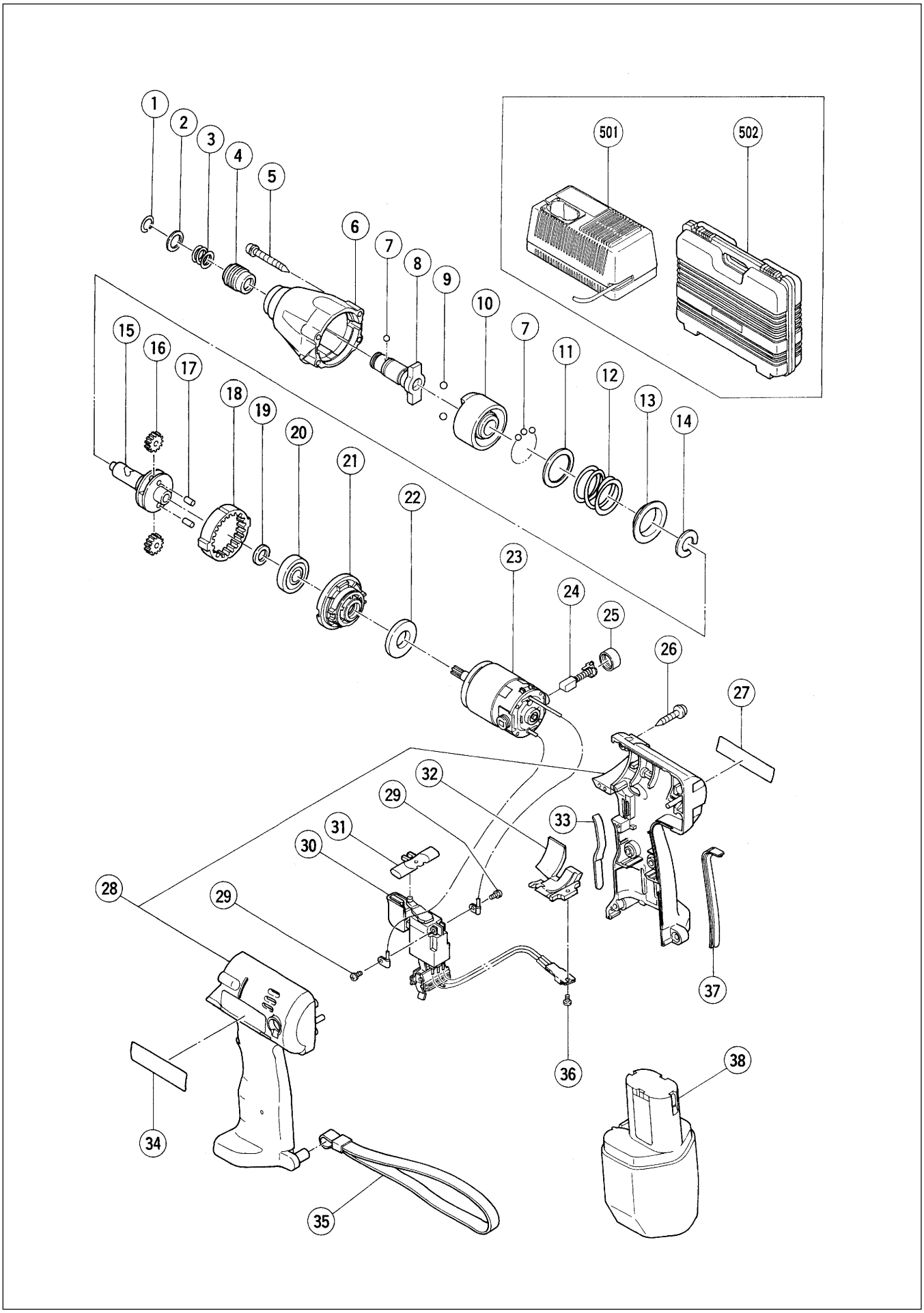

	ITEM NO.	CODE NO.	DESCRIPTION	NO. USED	REMARKS	
	1	315-984	RETAINING RING	1		
	2	315-983	WASHER (D)	1		
	3	315-982	GUIDE SPRING	1		
	4	315-981	GUIDE SLEEVE	1		
	5	307-851	TAPPING SCREW (W/SP. WASHER) D4X30(BLACK	4		
	6	317-339	HAMMER CASE	1		
	7	315-980	STEEL BALL D3.5	25		
	8	317-338	ANVIL (B)	1		
	9	959-154	STEEL BALL D5.556 (10 PCS.)	2		
	10	316-168	HAMMER	1		
	11	315-978	WASHER (J)	1		
	12	316-170	SPRING	1		
	13	316-172	WASHER (S)	1		
	14	316-171	STOPPER	1		
	15	316-169	SPINDLE	1		
	16	316-313	IDLE GEAR	2		
	17	991-449	NEEDLE ROLLER	2		
	18	302-337	RING GEAR	1		
	19	991-455	WASHER (C)	1		
	20	600-1VV	BALL BEARING 6001VVCMPS2L	1		
	21	316-167	INNER COVER	1		
	22	310-319	DAMPER	1		
	23	316-173	MOTOR	1		
	24	999-054	CARBON BRUSH 5X6X11.5 (1 PAIR)	2		
	25	316-180	BRUSH CAP	1		
	26	302-086	TAPPING SCREW (W/FLANGE) D4X20 (BLACK)	7		
	27		NAME PLATE	1		
	28	317-340	HOUSING (A).(B) SET	1	INCLUD.33,37	
	29	994-532	MACHINE SCREW (W/SP. WASHER) M3X5	2		
	30	316-783	DC-SPEED CONTROL SWITCH	1		
	31	316-166	PUSHING BUTTON	1		
	32	316-179	FIN ASS'Y	1	INCLUD.36	
	33	316-178	GRIP (F)	1		
	34		HITACHI LABEL	1		
	35	306-952	STRAP	1		
	36	311-131	S-TIGHT SCREW D3.5X6	1		
	37	316-177	GRIP (R)	1		
*	38	310-378	BATTERY EB 12B (W/ENGLISH N.P.)	1		
*	38	310-452	BATTERY EB 12B (W/ENGLISH N.P.)	1	FOR NZL,AUS	
*	38	310-453	BATTERY EB 12B (W/ENGLISH N.P.)	1	FOR USA,CAN	
*	38	316-665	BATTERY EB 12H (W/ENGLISH N.P.)	1		

* : ALTERNATIVE PARTS

STANDARD ACCESSORIES

	ITEM NO.	CODE NO.	DESCRIPTION	NO. USED	REMARKS	
*	501		CHARGER (MODEL UC 14YF)	1	DEPENDING ON ORDER SPEC.	
*	501		CHARGER (MODEL UC 14YF2)	1	DEPENDING ON ORDER SPEC.	
	502	306-306	CASE	1		

OPTIONAL ACCESSORIES

	ITEM NO.	CODE NO.	DESCRIPTION	NO. USED	REMARKS	
	601	992-671	+ DRIVER BIT (B) NO.2 50L	1		
	602	992-672	+ DRIVER BIT (B) NO.3 50L	1		
	603	996-177	NON-MAGNETIC HEX. SOCKET 8MM 65L	1		
	604	985-329	NON-MAGNETIC HEX. SOCKET 10MM 65L	1		
	605	996-178	NON-MAGNETIC HEX. SOCKET 12MM 65L	1		
	606	996-179	NON-MAGNETIC HEX. SOCKET 13MM 65L	1		
	607	996-180	NON-MAGNETIC HEX. SOCKET 14MM 65L	1		
	608	996-181	NON-MAGNETIC HEX. SOCKET 16MM 65L	1		
	609	996-182	NON-MAGNETIC HEX. SOCKET 17MM 65L	1		
	610	996-197	HEX. SOCKET (LONG) 21MMX166L	1		
	611	996-195	DRILL CHUCK AND ADAPTER SET	1	INCLUD.612,613	
	612	930-119	CHUCK WRENCH 6.5G	1		
	613	307-543	CHUCK ADAPTER	1		
	614	307-824	HOLSTER	1		
	615	308-090	HOOK (FOR CORDLESS TOOLS)	1		
*	616	316-665	BATTERY EB 12H (W/ENGLISH N.P.)	1	EXCEPT FOR NZL,AUS,USA,CAN	
	617	309-922	GREASE FOR IMPACT DRIVER (500G)	1		

Printed in Japan 11 – 98
(981130 N)

* : ALTERNATIVE PARTS