Assembly Diagram for WH 8D2

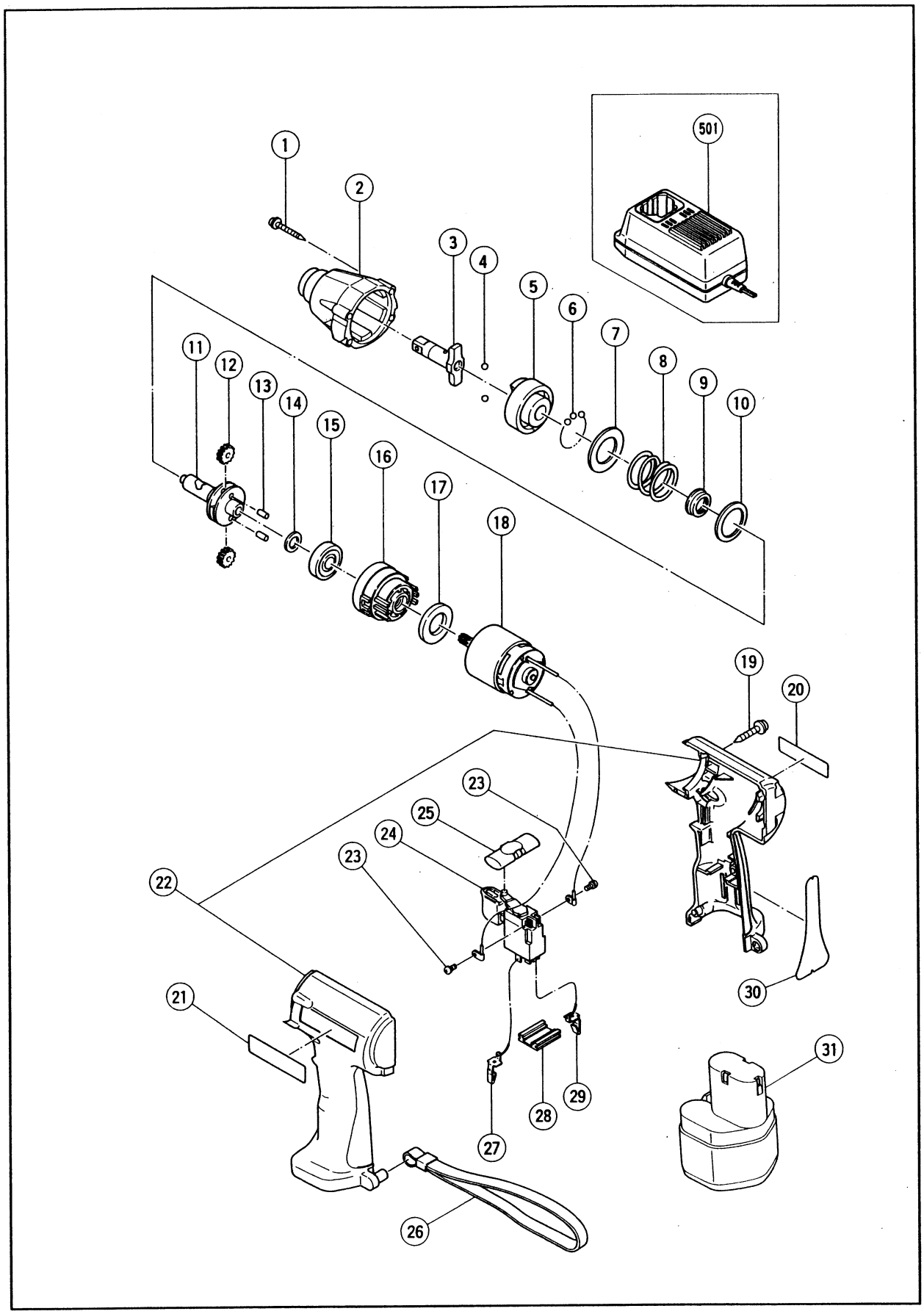

ITEM NO.	CODE NO.	DESCRIPTION	NO. USED	REMARKS	
1	307-851	TAPPING SCREW (W/SP. WASHER) D4X30(BLACK)	4		
2	310-385	HAMMER CASE	1		
3	310-373	ANVIL (K)	1		
4	959-154	STEEL BALL D5.556 (10 PCS.)	2		
5	302-330	HAMMER	1		
6	959-155	STEEL BALL D3.97 (10 PCS.)	21		
7	302-331	WASHER (G)	1		
8	302-334	SPRING	1		
9	310-321	STOPPER (A)	1		
10	302-333	WASHER (H)	1		
11	302-332	SPINDLE	1		
12	~~991-448~~	IDLE GEAR	2	318444	
13	991-449	NEEDLE ROLLER	2		
14	991-455	WASHER (C)	1		
15	600-1VV	BALL BEARING 6001VVCMPS2L	1		
16	310-320	INNER COVER	1		
17	310-319	DAMPER	1		
18	310-324	MOTOR	1		
19	302-086	TAPPING SCREW (W/FLANGE) D4X20 (BLACK)	6		
20		NAME PLATE	1		
21		HITACHI LABEL	1		
22	310-376	HOUSING (A).(B) SET	1	INCLUD.30	
23	994-532	MACHINE SCREW (W/SP. WASHER) M3X5	2		
24	310-375	SWITCH ASS'Y	1	INCLUD.27,29	
25	306-151	PUSHING BUTTON	1		
26	306-952	STRAP	1		
27	310-328	TERMINAL (C) (BROWN)	1		
28	991-666	TERMINAL SUPPORT	1		
29	310-329	TERMINAL (C) (BLUE)	1		
30	310-323	GRIP TAPE	1		
31	991-644Z	BATTERY EB 9 (W/ENGLISH N.P.)	1		

★: ALTERNATIVE PARTS