Rol-Air
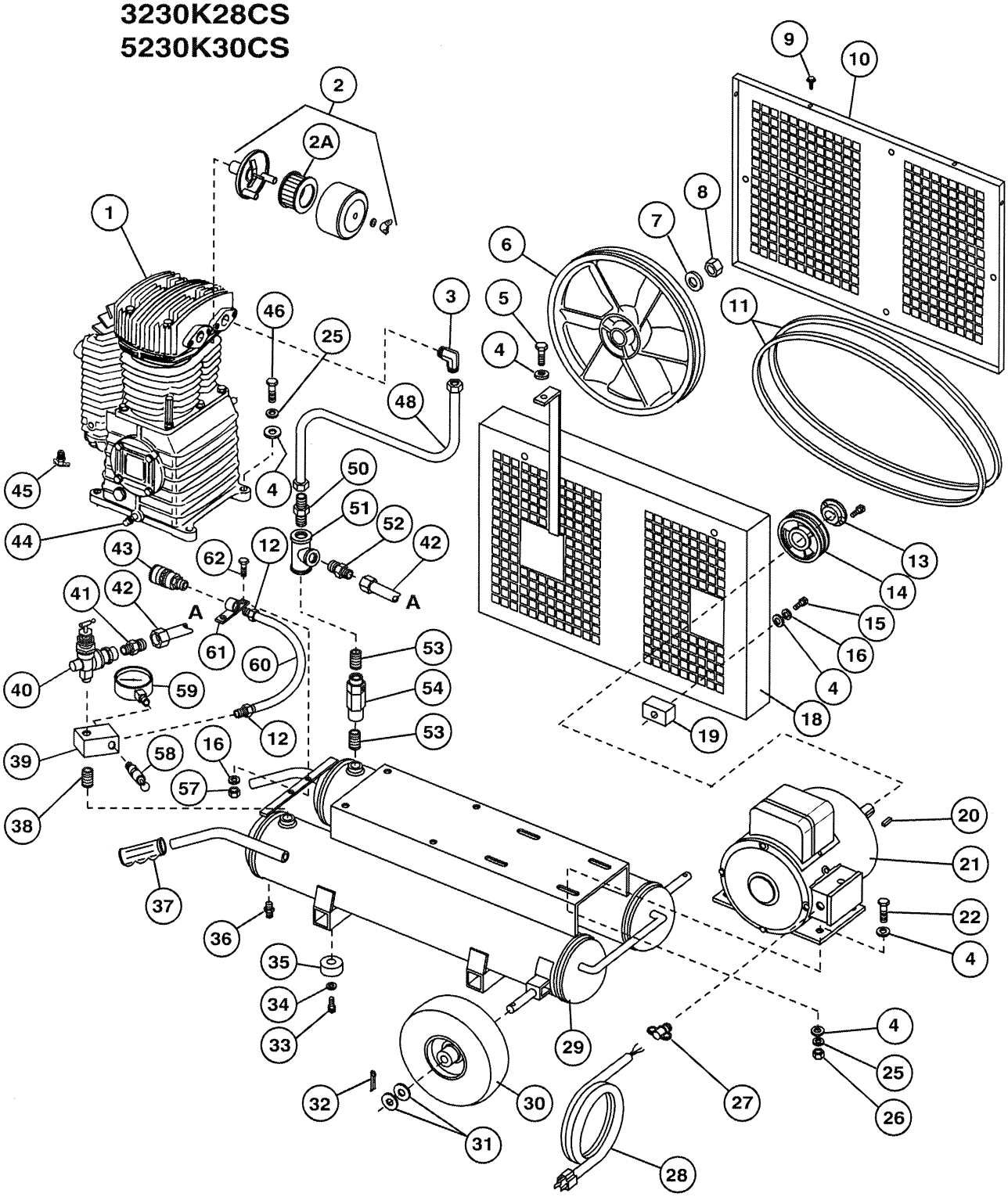
SCHEMATIC FOR MODEL
3230K24CS
3230K28CS
5230K30CS