Rol-Air

SCHEMATIC FOR PMP22K29

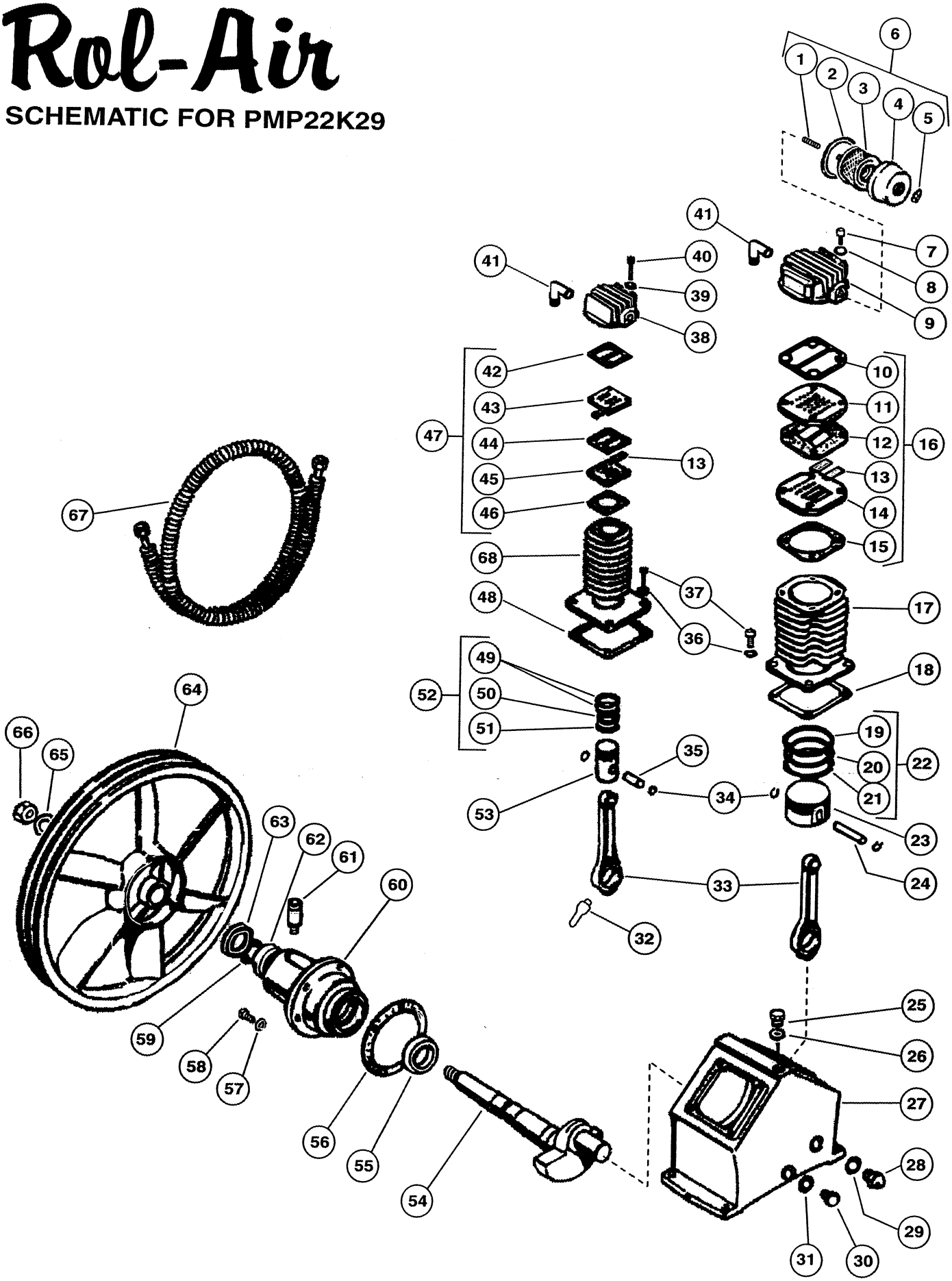

PB0035C

9/06

Associate Engineering Corporation
606 S. Lake Street, P.O. Box 346
Hustisford Wisconsin 53034-0346
Phone: 920-349-3281 **www.rolair.net**
Sales Fax: 920.349.3691 Service Fax: 920.349.8861

PARTS LIST FOR

PMP22K29

Schematic #	Description	Part #	Qty.
1	Tension Rod	37302370CH	1
2	Filter Base	35602360CH	1
3	Filter Element	35602380CH	1
4	Filter Cover	35602350CH	1
5	Wing Nut	37400450CH	1
6	Filter Assembly	FILASYK30	1
7	Bolt	37302900CH	4
8	Washer	37502320CH	4
9	Head-LP	31309020CH	1
10	Gasket	30509170CH	1
11	Valve Plate	32709060CH	1
12	Gasket	30509160CH	1
13	Reed	32702400CH	4
14	Valve Plate	32709060CH	1
15	Gasket	30509150CH	1
16	Valve Plate Assembly-LP	2900VK29VLP	1
17	Cylinder-LP	31609040CH	1
18	Gasket	30509140CH	1
19	Compression Ring-LP	31202160CH	1
20	Scraper Ring-LP	31202170CH	1
21	Oil Ring-LP	31202180CH	1
22	Ring Set-LP	32546110CH	1
23	Piston-LP	31202190CH	1
24	Piston Pin-LP	31202230CH	1
25	Oil Fill Plug	36503650CH	1
26	Gasket	3050016ACH	1
27	Crankcase	33109000CH	1
28	Sight Glass	36504450CH	1
29	Gasket	30504440CH	1
30	Drain Bolt	36500110CH	1
31	Gasket	30500160CH	1
32	Dipper	37604180CH	1
33	Connecting Rod	31109080CH	2
34	Snap Ring	37602260CH	4
35	Piston Pin-HP	31202240CH	1
36	Washer	37504220CH	8
37	Bolt	37303620CH	8
38	Head-HP	31309030CH	1
39	Washer	37500400CH	4
40	Bolt	37304800CH	4
41	Elbow	16904680CH	2
42	Gasket	30509200CH	1
43	Valve Plate	32709070CH	1
44	Gasket	30509190CH	1
45	Valve Plate	32709070CH	1
46	Gasket	30509180CH	1
47	Valve Plate Assembly-HP	2900VK29VHP	1
48	Gasket	30509140CH	1
49	Compression Ring-HP	31203390CH	2
50	Scraper Ring-HP	31202200CH	1
51	Oil Ring-HP	31202210CH	1
52	Ring Set-HP	32546120CH	1
53	Piston-HP	31203050CH	1
54	Crankshaft	30209010CH	1
55	Bearing	30309150CH	1
56	Gasket	30509130CH	1
57	Washer	37508130CH	6
58	Bolt	37304240CH	6
59	C-Clip	37607560CH	1
60	Bearing Carrier	30409090CH	1
61	Breather/Oil Fill Plug	36507050CH	1
62	Bearing	30309160CH	1
63	Oil Seal	30309120CH	1
64	Flywheel	31003040CH	1
65	Washer	37502450CH	1
66	Nut	37403780CH	1
67	Intercooler	32909010CH	1
68	Cylinder-HP	31609050CH	1
	Gasket Set	K29VGASKETS	1
	Ring Set	K29RINGS	1